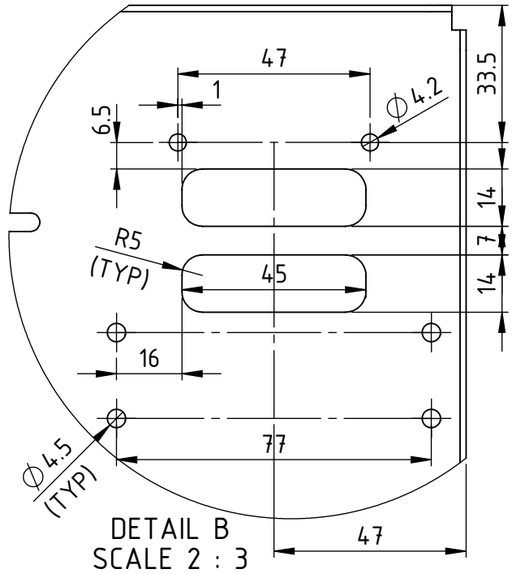

DETAIL B
SCALE 2 : 3

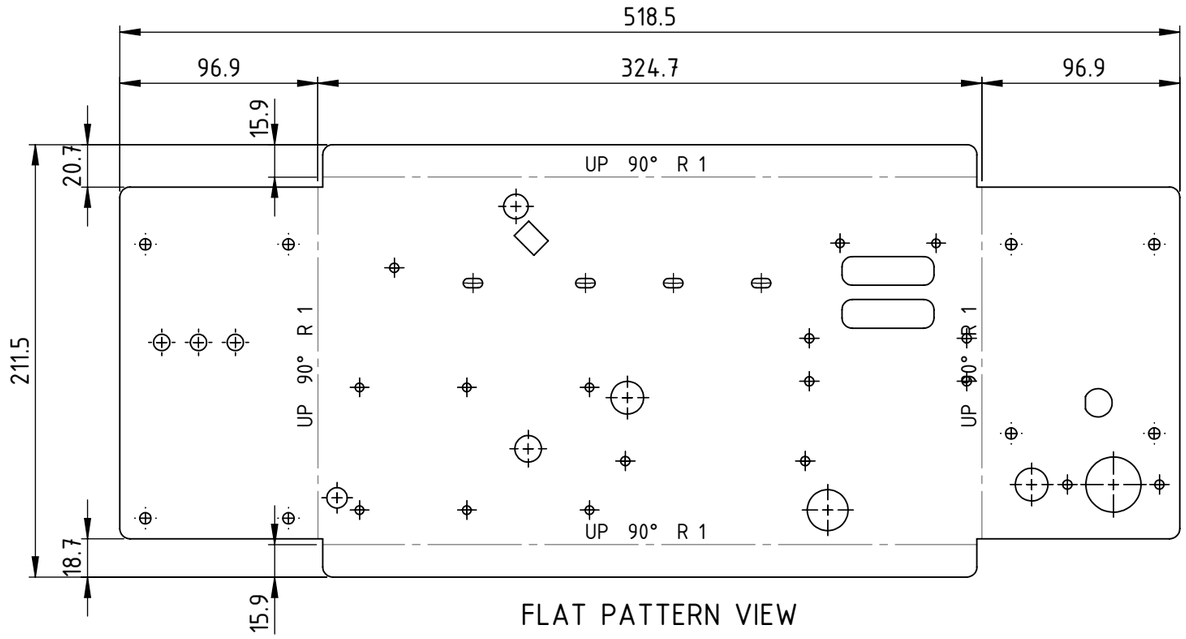

FLAT PATTERN VIEW

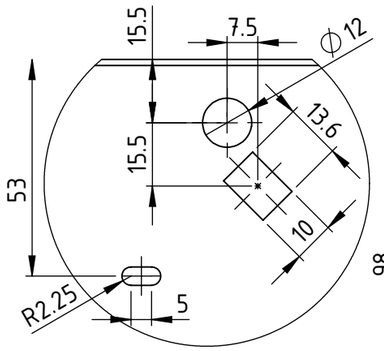

DETAIL A
SCALE 2 : 3

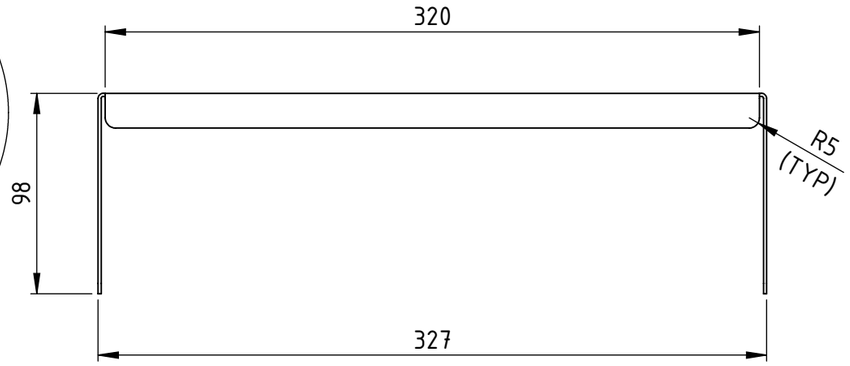

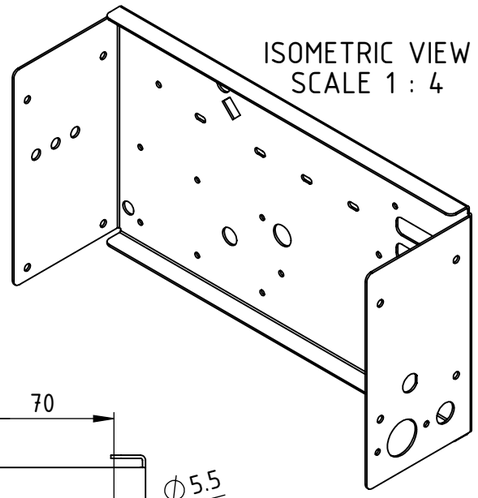

ISOMETRIC VIEW
SCALE 1 : 4

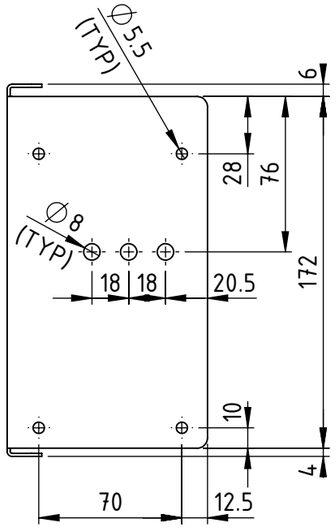

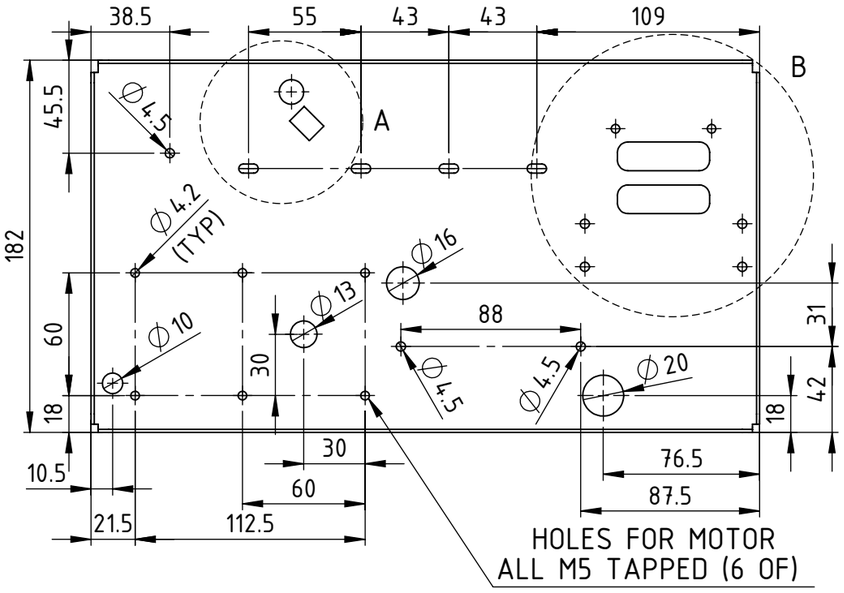

HOLES FOR MOTOR
ALL M5 TAPPED (6 OF)

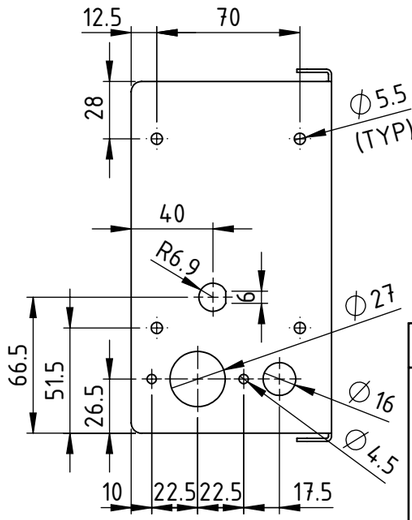

NOTES

1. REMOVE ALL SHARP EDGES, CORNERS AND BURRS.
2. EXTENT OF SUPPLY TO INCLUDE MATERIAL CERTIFICATES TO EN 10204/3.1.
3. UNLESS OTHERWISE STATED GENERAL DIMENSION TOLERANCES ±0.1mm.
4. UNLESS OTHERWISE STATED ALL DIMENSIONS IN mm.

MATERIALS

5. ALL 304 STAINLESS STEEL
6. 1.5mm THICK SHEET

FINISH

7. STAINLESS STEEL: NO FINISH REQUIRED.
8. ALL WELD AREAS AND HEAT AFFECTED ZONES TO BE MECHANICALLY PASSIVATED. ALL SURFACES TO BE CLEAN, FREE FROM SCRATCHES, WELD SPATTER.

REV.	DESCRIPTION	DATE	BY
00	INITIAL SUBMISSION	14/11/2014	JT
01	KNOCKOUT HOLES ADDED FOR TPLC.	20/03/2017	AM
02	SLOTS FOR GEAR MOTOR CHANGED TO M5 TAPPED HOLES AND ADDTIONAL HOLES ADDED. KNOCKOUT HOLES FOR TPLC REMOVED.	03/08/2017	AM
03	HOLES FOR GEAR MOTOR REPOSITIONED	02/02/2018	AM
04	HOLE SIZE CHANGED TO Ø20mm	30/08/2018	AM
05	SOME DIMENSIONS ADJUSTED FOR BETTER FIT	07/01/2019	SH

MATERIAL: STAINLESS STEEL	SPECIFICATION: 304 GRADE	PROJECTION: THIRD ANGLE	DRAWING SCALE: 1 : 4 / SHEET SIZE: A3
Environmental Products & Services www.EPAS-Ltd.com	DRAWN BY: S HARVEY	CREATED DATE: 14/11/14	REVISION NUMBER: 05
	CHECKED BY: A MARCOV	REVISION DATE : 07/01/2018	
	DESCRIPTION: MMP (MOTOR MOUNTING PLATE)		
	DRAWING NUMBER: 0509P02-SS	SHEET: 1 of 1	

THIS DRAWING AND ANY INFORMATION OR DESCRIPTIVE MATERIAL SET OUT ON IT ARE THE CONFIDENTIAL AND COPYRIGHT PROPERTY OF ENVIRONMENTAL PRODUCTS & SERVICES LTD AND MUST NOT BE DISCLOSED, COPIED, LOANED IN WHOLE OR PART OR USED FOR ANY PURPOSE WITHOUT WRITTEN PERMISSION.