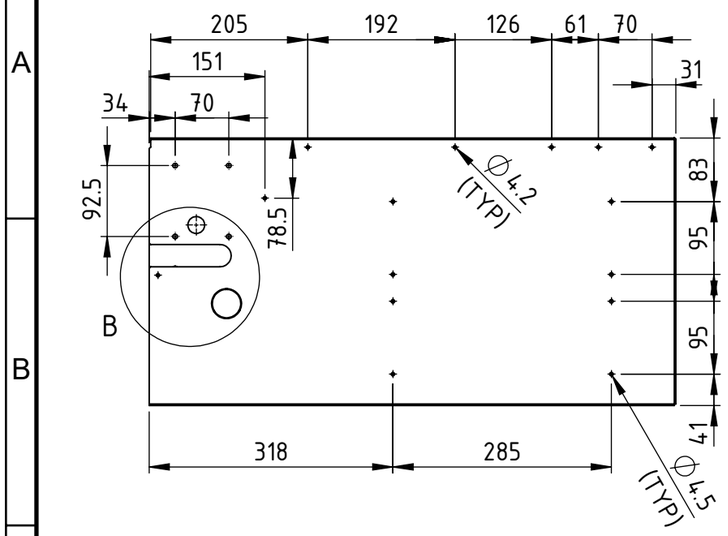


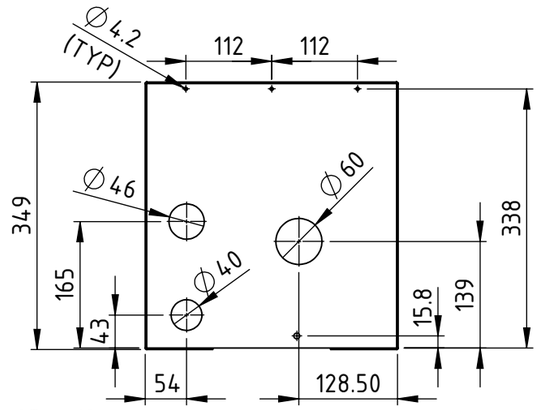


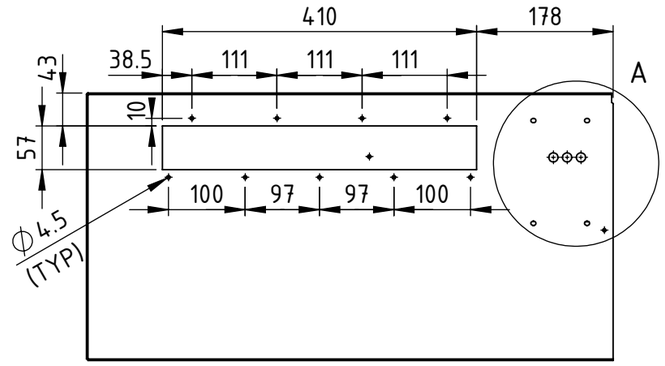


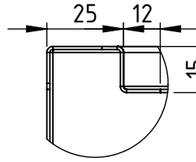


DETAIL
TOP SECTION
SCALE 1 : 2

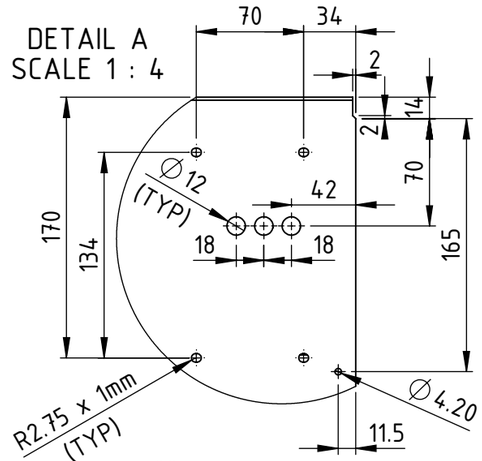


DETAIL A
SCALE 1 : 4

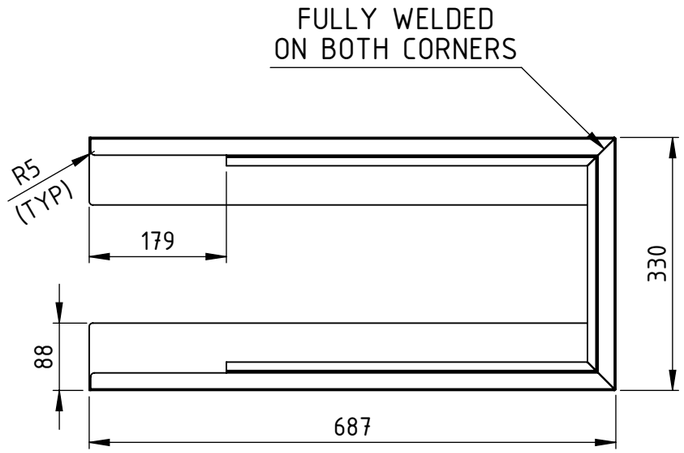


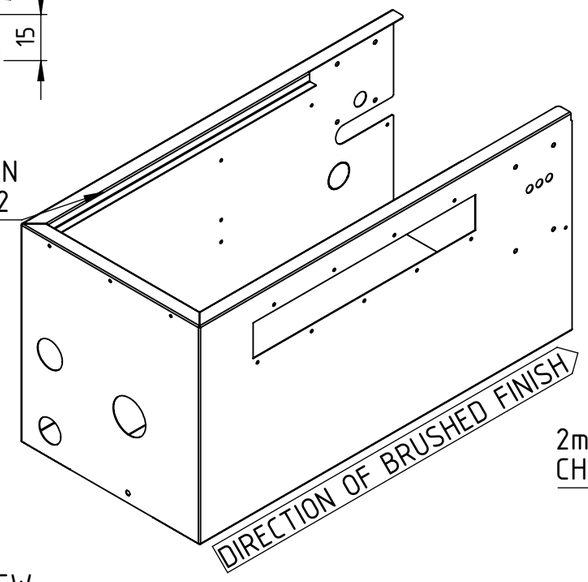


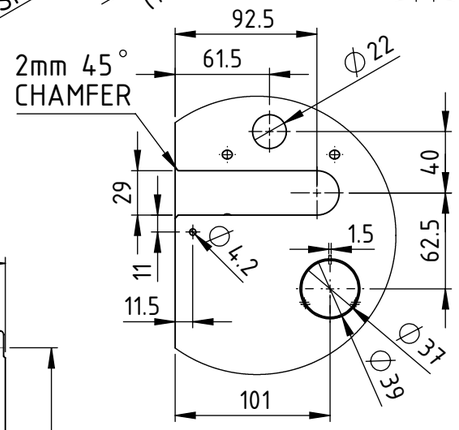


DETAIL B
SCALE 1 : 4

FLAT PATTERN VIEW

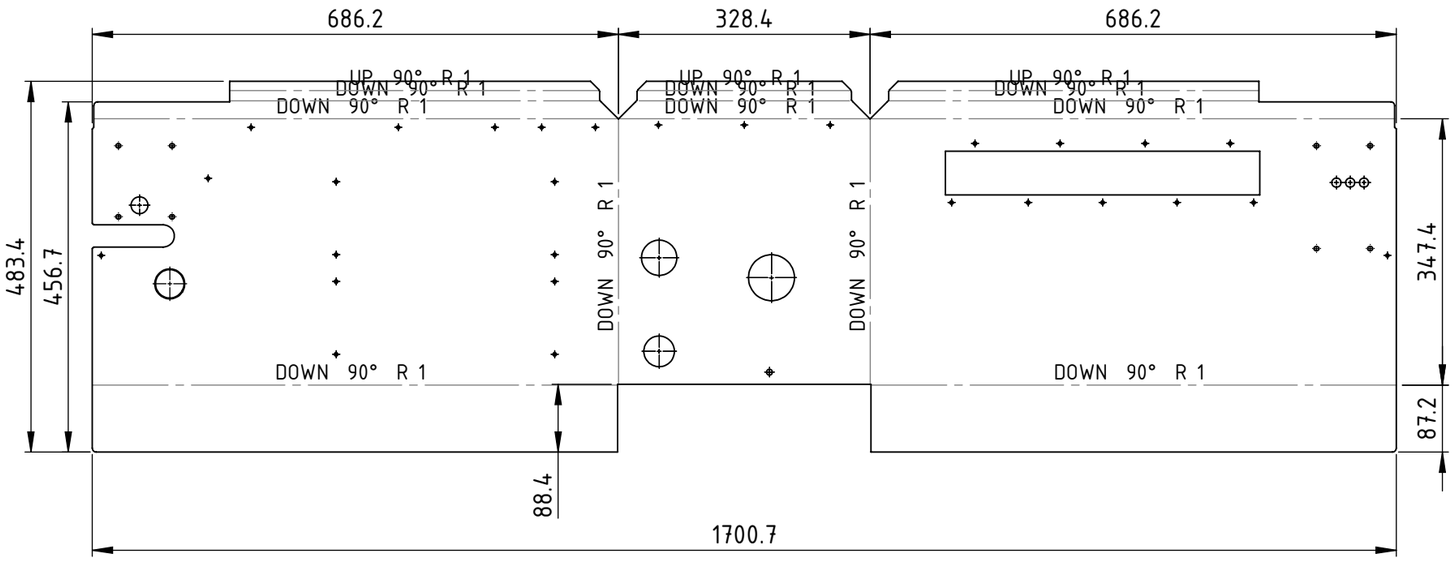


NOTES

1. REMOVE ALL SHARP EDGES, CORNERS AND BURRS.
2. EXTENT OF SUPPLY TO INCLUDE MATERIAL CERTIFICATES TO EN 10204/3.1.
3. UNLESS OTHERWISE STATED GENERAL DIMENSION TOLERANCES ±0.1mm.
4. UNLESS OTHERWISE STATED ALL DIMENSIONS IN mm.
5. FULLY WELDED CONSTRUCTION WHERE INDICATED.

MATERIALS

6. ALL 304 STAINLESS STEEL
7. 1.0mm THICK SHEET

FINISH

8. STAINLESS STEEL: BRUSHED FINISH ON EXTERNAL SURFACES AS SHOWN.
9. ALL WELD AREAS AND HEAT AFFECTED ZONES TO BE MECHANICALLY PASSIVATED. ALL SURFACES TO BE CLEAN, FREE FROM SCRATCHES, WELD SPATTER.

| REV. | DESCRIPTION | DATE | BY |
|---|---|---|---|
| 00 | INITIAL SUBMISSION | 20/07/2012 | JT |
| 01 | SOME DIMENSIONS ALTERED FOR BETTER FIT | 19/12/2018 | SH |

| | | | |
|---|---|---|---|
| MATERIAL: **STAINLESS STEEL** | SPECIFICATION: **304 GRADE** | PROJECTION: **THIRD ANGLE** | DRAWING SCALE: **1 : 8** / SHEET SIZE: **A3** |
| **Environmental Products & Services** www.EPAS-Ltd.com | | DRAWN BY: **S HARVEY** | CREATED DATE: **20/07/12** / REVISION NUMBER: **01** |
| | | CHECKED BY: **A MARCOV** | REVISION DATE : **19/12/2018** |
| | | DESCRIPTION: **GS1850 - MAIN ENCLOSURE** | |
| | | DRAWING NUMBER: **0509P51-S** | SHEET: **1 of 1** |

THIS DRAWING AND ANY INFORMATION OR DESCRIPTIVE MATERIAL SET OUT ON IT ARE THE CONFIDENTIAL AND COPYRIGHT PROPERTY OF ENVIRONMENTAL PRODUCTS & SERVICES LTD AND MUST NOT BE DISCLOSED, COPIED, LOANED IN WHOLE OR PART OR USED FOR ANY PURPOSE WITHOUT WRITTEN PERMISSION.