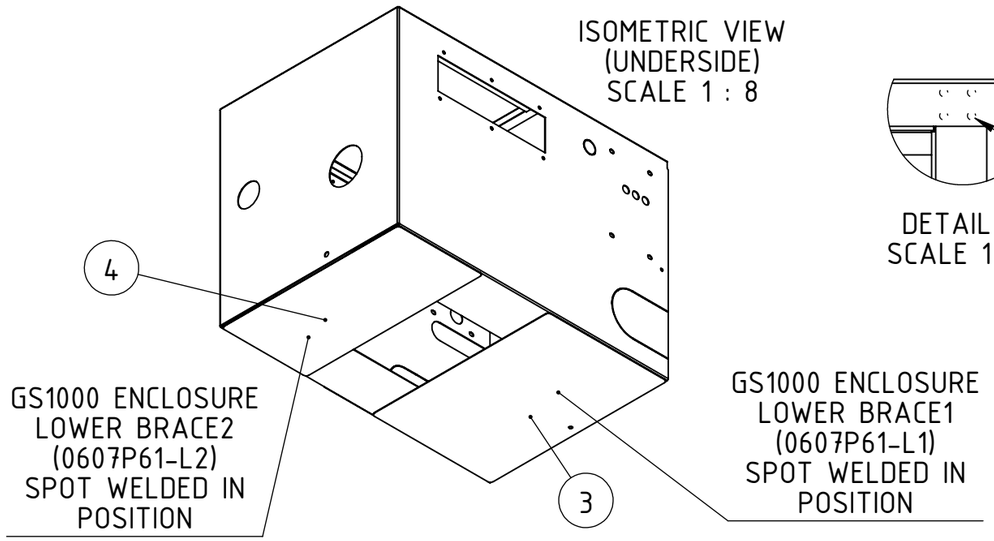

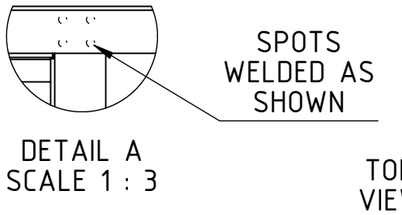

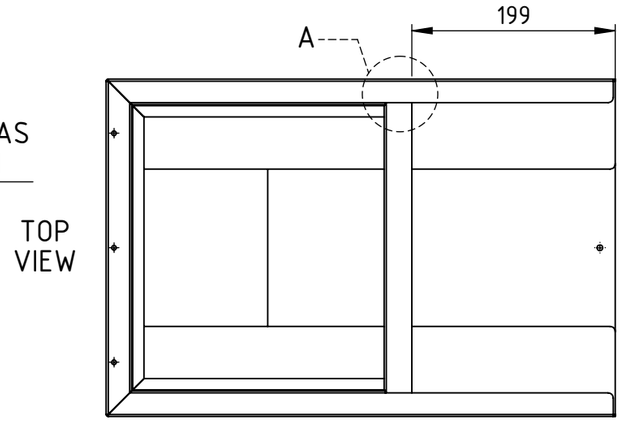

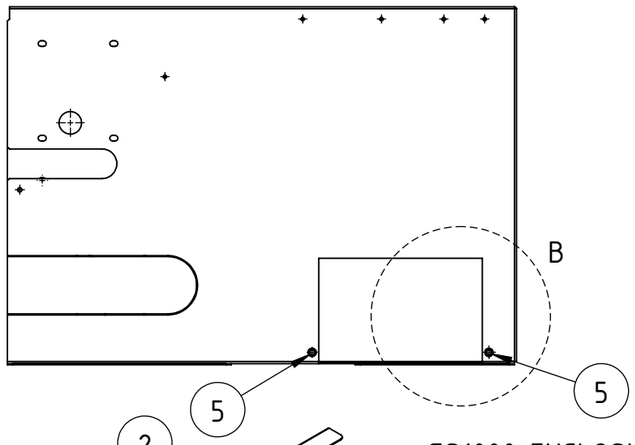

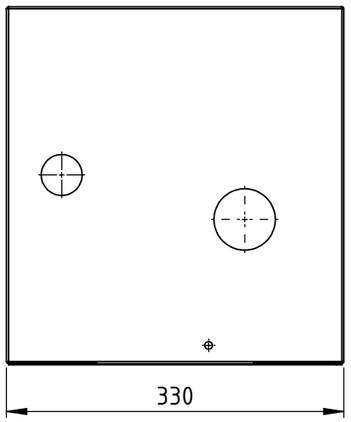

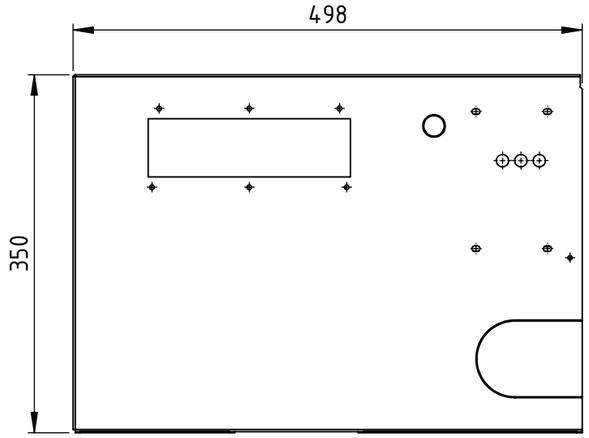

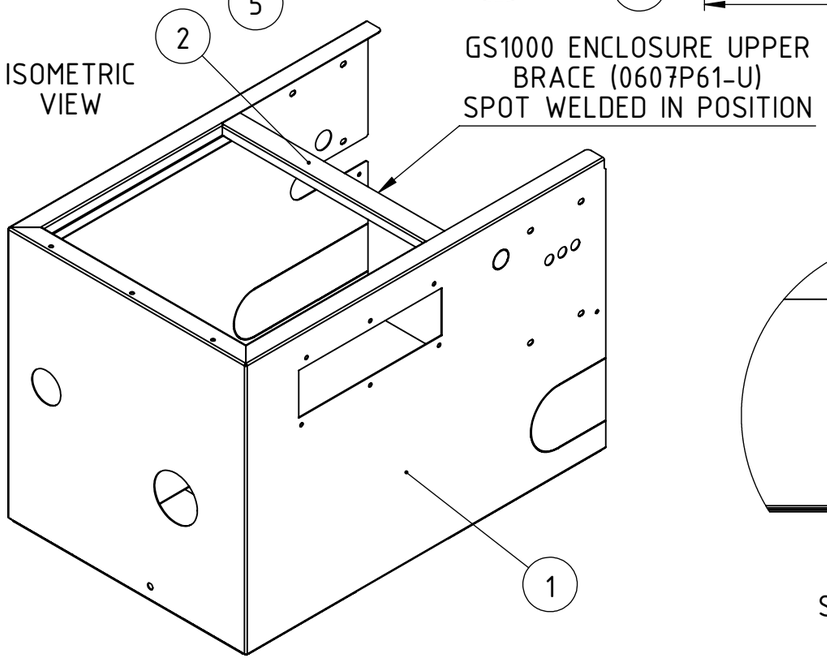

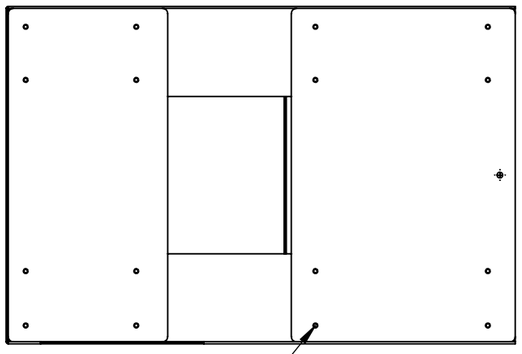

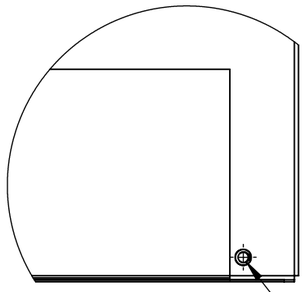

2 x M5 NUTSERT
TO BE USED ON THE
REAR OF THE ENCLOSURE

BOM

ITEM NO.	PART NUMBER	DESCRIPTION	QTY.
1	0607P61	GS1000 - MAIN ENCLOSURE	1
2	0607P61-U	GS1000 - MAIN ENCLOSURE - UPPER BRACE	1
3	0607P61-L1	GS1000 - MAIN ENCLOSURE - LOWER BRACE 1	1
4	0607P61-L2	GS1000 - MAIN ENCLOSURE - LOWER BRACE 2	1
5	-	M5 NUTSERT	2

NOTES

1. REMOVE ALL SHARP EDGES, CORNERS AND BURRS.
2. EXTENT OF SUPPLY TO INCLUDE MATERIAL CERTIFICATES TO EN 10204/3.1.
3. UNLESS OTHERWISE STATED GENERAL DIMENSION TOLERANCES ±0.1mm.
4. UNLESS OTHERWISE STATED ALL DIMENSIONS IN mm.
5. FULLY WELDED CONSTRUCTION WHERE INDICATED.

MATERIALS

6. ALL 304 STAINLESS STEEL
7. 1.0mm THICK SHEET

FINISH

8. STAINLESS STEEL: BRUSHED FINISH ON EXTERNAL SURFACES AS SHOWN.
9. ALL WELD AREAS AND HEAT AFFECTED ZONES TO BE MECHANICALLY PASSIVATED. ALL SURFACES TO BE CLEAN, FREE FROM SCRATCHES, WELD SPATTER.

REV.	DESCRIPTION	DATE	BY
00	INTIAL SUBMISSION	20/07/2012	JT
01	SOME DIMENSIONS ALTERED FOR BETTER FIT	01/02/2019	AM
02	REVISIONS MADE TO MAIN ENCLOSURE	27/01/2020	SH

MATERIAL: **STAINLESS STEEL**	SPECIFICATION: **304 GRADE**	PROJECTION: **THIRD ANGLE**	DRAWING SCALE: **1 : 6** / SHEET SIZE: **A3**
Environmental Products & Services www.EPAS-Ltd.com		DRAWN BY: **A MARCOV**	CREATED DATE: **20/07/12** / REVISION NUMBER: **02**
		CHECKED BY: **S HARVEY**	REVISION DATE : **27/01/2020**
		DESCRIPTION: **GS1000 - MAIN ENCLOSURE ASSEMBLY**	
		DRAWING NUMBER: **0607A61**	SHEET: **1 of 1**

THIS DRAWING AND ANY INFORMATION OR DESCRIPTIVE MATERIAL SET OUT ON IT ARE THE CONFIDENTIAL AND COPYRIGHT PROPERTY OF ENVIRONMENTAL PRODUCTS & SERVICES LTD AND MUST NOT BE DISCLOSED, COPIED, LOANED IN WHOLE OR PART OR USED FOR ANY PURPOSE WITHOUT WRITTEN PERMISSION.